Driver Specification Sheet

Peerless by TYMPHANY

Model No: PLS-50N25AL01-08

Product Line: Tymphany

Rev: 1

Last Update: 2017-03-03 02:00:02

Product Description

This 2 inch 8 ohm member of the PLS family sets a high standard, for compact full range drivers intended for applications such as television soundbars and compact music systems. Design features in this family include a damped plastic basket with venting under the spider to aid cooling of the motor, a neodymium magnet motor with copper cap to lower coil inductance, providing low distortion at low frequencies and extended high frequency response. A black anodized aluminium cone is employed on the driver, along with a black anodized aluminium dust cap coupled directly to the voice coil. Additionally, the cones come equipped with special-designed large roll rubber surrounds, which allow for a dynamic linear response to high excursion input signals.

Mechanical Drawing

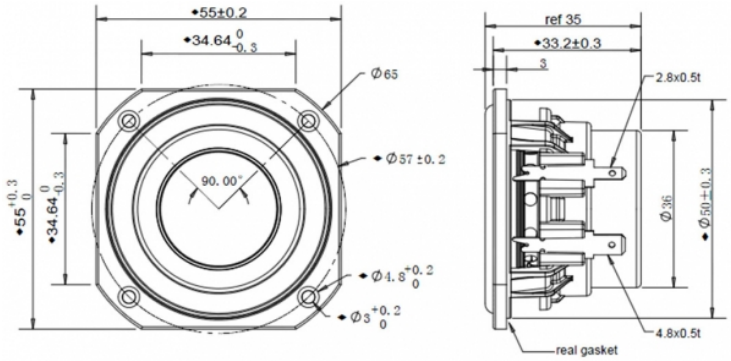

Specifications

DC Resistance	Revc	Ohms	6.15	5.0%	Energy Bandwidth Product	EBP	(1/Qes)*fs	
Minimum Impedance	Zmin	Ohms	6.91	7.5%	Moving Mass	Mms	g	1.6
Voice Coil Inductance	Le	mH	0.04		Suspension Compliance	Cms	um/N	599.9
Resonant Frequency	Fs	Hz	161.02	15%	Effective Cone diameter	D	cm	4.4
Mechanical Q Factor	Qms		4.94		Effective Piston Area	Sd	cm^2	15.2
Electrical Q Factor	Qes	0.89			Effective Volume	Vas	L	0.2
Total Q Factor	Qts		0.76		Motor Force Factor	BL	Tm	3.38
Ratio Fs/Qts	F	Fs/Qts	213.22		Motor Efficiency Factor	ß	(T*M^2)/Ohms	1.9
Half Space Sensitivity @2.83V	db@2.83V/1M	dB	83.44	+/- 1.0db	Voice coil former Material	VCfm		ASV
Half Space Sensitivity @1W/1M	db@1W/1M	dB	82.8	+/- 1.0db	Voice coil inner diameter	VCd	mm	25.73
Gap Height	Gh	mm	3		Rated Noise Power	P	W	10
Maximum Linear Excursion	Xmax	mm	1.7		Test Spectrum Bandwidth	150~20KHz		
Ferrofluid Type	FF				Driver Size	Inch	2 in	
Driver Mass	Kg	0.14						

Frequency and Impedance Response

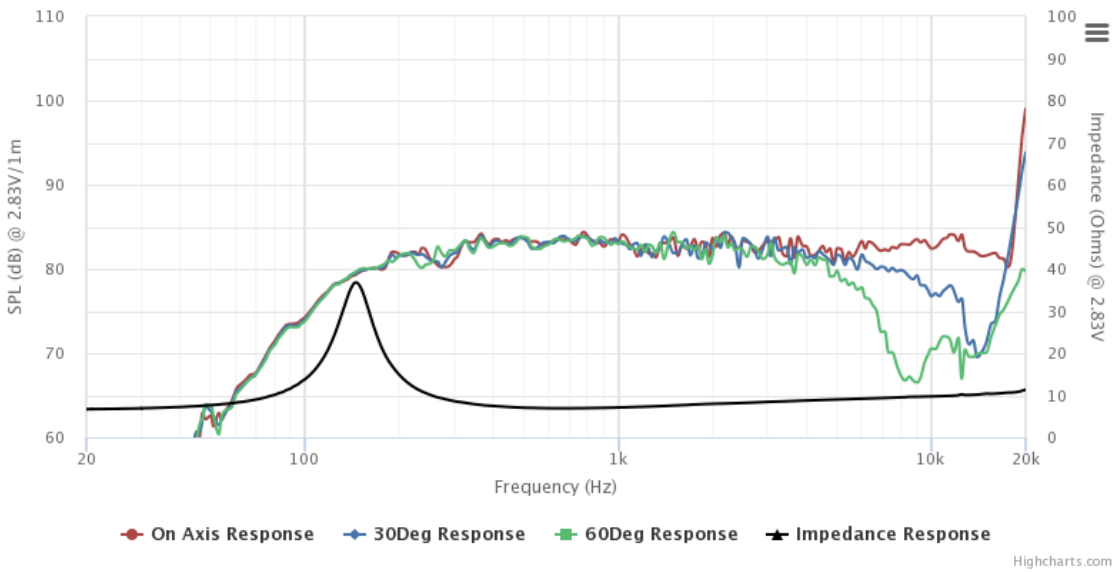

Tymphany HK LTD
Address : Room 1307-8 Dominion Centre, 43-59 Queens Rd East, Wanchai, Hong Kong
E-mail: sales@tymphany.com