THIS DRAWING IS UNPUBLISHED. RELEASED FOR PUBLICATION -.- .
© COPYRIGHT - BY TYCO ELECTRONICS CORPORATION. ALL RIGHTS RESERVED.

LOC	DIST
AD	00

REVISIONS

P	LTR	DESCRIPTION	DATE	DWN	APVD
	A1	REVISED PER ECO-07-018664	23AUG07	DH	AS

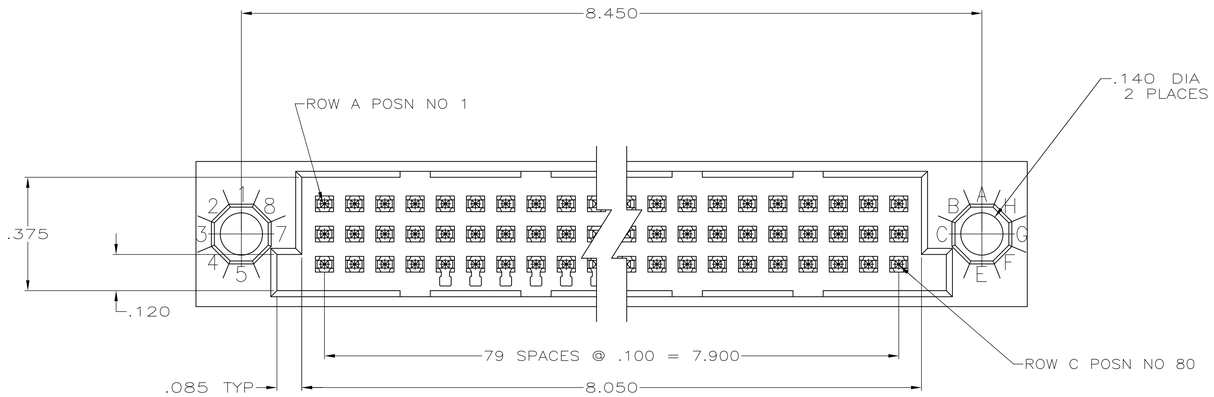

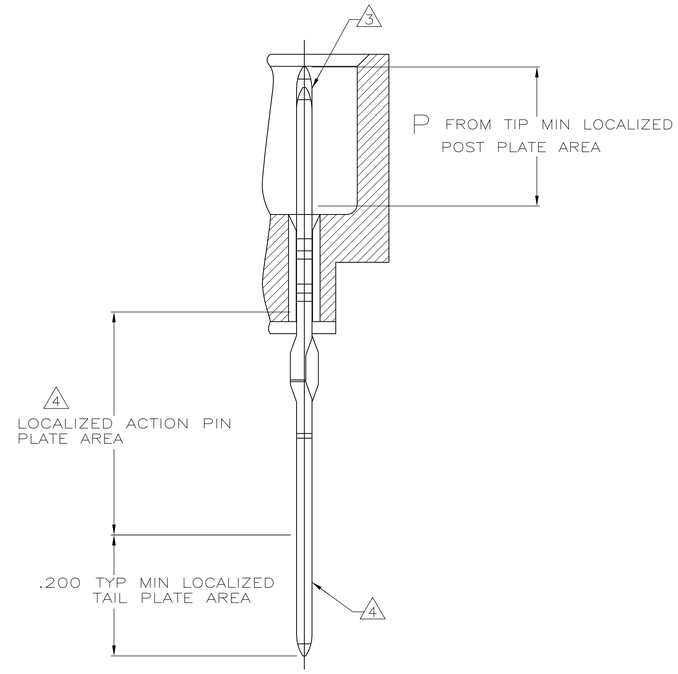

DETAIL Z

SCALE 8:1
TYP ALL PINS

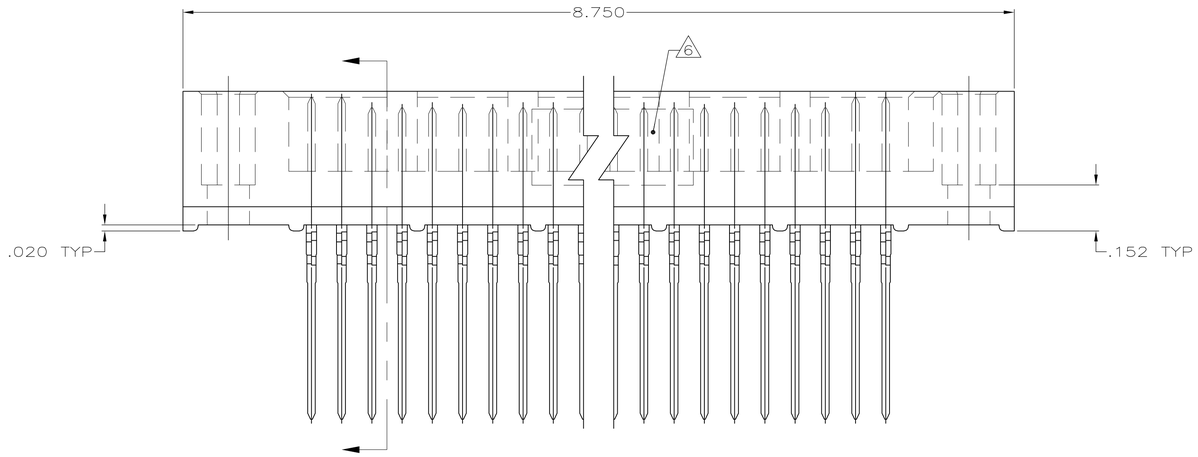

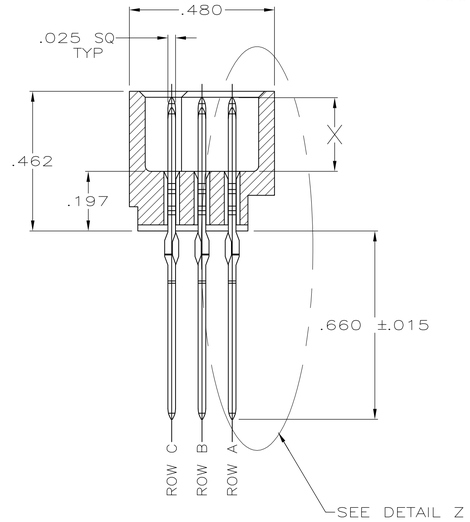

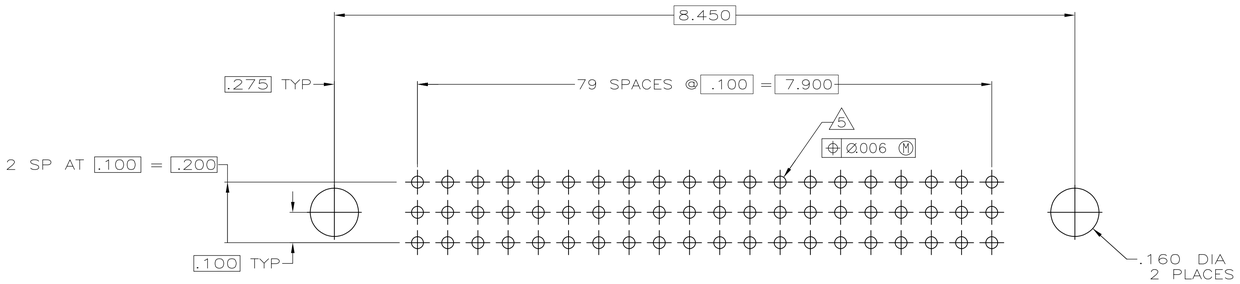

RECOMMENDED P.C. BOARD LAYOUT

THIS DRAWING IS A CONTROLLED DOCUMENT.	DWN T. SHUEY 1-11-93	Tyco Electronics	Tyco Electronics Corporation Harrisburg, PA 17105-3608
DIMENSIONS: mm	TOLERANCES UNLESS OTHERWISE SPECIFIED: 0 PLC ± – 1 PLC ± – 2 PLC ± – 3 PLC ± .005 4 PLC ± – ANGLES ± –	CHK J. WEARY 1-18-93	NAME ASSEMBLY, PIN TBC, 3 ROW, 240 POSITION, .50 GOLD, BOTH ENDS
		APVD –	
		PRODUCT SPEC —	
		APPLICATION SPEC —	
MATERIAL 1 2	FINISH 3 4	WEIGHT —	SIZE A1 CAGE CODE 00779 DRAWING NO C-536785 RESTRICTED TO
		CUSTOMER DRAWING	SCALE 4:1 SHEET 1 OF 2 REV A1

OBSOLETE
NOT THE LATEST
REVISION

THIS DRAWING IS UNPUBLISHED. RELEASED FOR PUBLICATION -,- .
© COPYRIGHT - BY TYCO ELECTRONICS CORPORATION. ALL RIGHTS RESERVED.

LOC	DIST
AD	00

REVISIONS

P	LTR	DESCRIPTION	DATE	DWN	APVD
	—	SEE SHEET 1	—	—	—

1. HOUSING MATERIAL: POLYPHENELYNE SULFIDE (PPS), COLOR: BROWN.
2. CONTACT MATERIAL: PHOSPHOR BRONZE
3. CONTACT FINISH: .000050–.000090 NICKEL UNDERPLATE OVER ALL WITH .000050 GOLD IN LOCALIZED POST PLATE AREA (FROM TIP DOWN 'P' MIN) ON TWO MATING SIDES.
4. CONTACT FINISH: .000050–.000090 NICKEL UNDERPLATE OVER ALL WITH .000050 GOLD MIN THICK IN LOCALIZED TAIL PLATE AREA (FROM TIP UP .200 MIN) ON ALL FOUR SIDES. GOLD FLASH IN ACTION PIN AREA.
5. ACTION PIN POSTS REQUIRE .093 MIN THICK P.C. BOARD, RECOMMENDED HOLE SIZE IS .0453 NOMINAL DIA PLATED THROUGH WITH .001–.003 COPPER WITH .0003 MIN TIN–LEAD. FINISHED HOLE AFTER PLATING IS .037–.043 DIA AND AFTER REFLOW .036–.043 DIA.
6. AMP, PART NUMBER AND DATE CODE INK STAMPED IN THIS APPROX AREA.
7. THE .245 LONG MAKE FIRST POSTS EXCEED THE ALIGNMENT CAPABILITY OF THE HOUSING AND COULD POSSIBLY STUB DURING MATING, CUSTOMER MUST TAKE THIS INTO CONSIDERATION IN CARD CAGE DESIGN.

| NUMBER END | | |