DRAWING MADE IN THIRD ANGLE PROJECTION

THIS DRAWING IS UNPUBLISHED. RELEASED FOR PUBLICATION ,19 .

© COPYRIGHT 19 BY AMP INCORPORATED. ALL INTERNATIONAL RIGHTS RESERVED.

LOC	DIST
AF	50

P	F	ZONE	LTR	DESCRIPTION	DATE	APPD
			C	REV PER AF-6055	5/9/89	DKS

1. MAG-MATE CAVITY SPECIFICATION.
2. CARRIER SIDE ONLY.
3. STRIPPING SHOULDERS
   GAGING: GO .006 / NO GO .0095.
4. SLOT TERMINATES #20 SOLID WIRE.
   GAGING: GO .027 / NO GO .031.
5. SLOT TERMINATES #31-#27 COPPER MAGNET WIRE EITHER SINGLE OR DOUBLE OF THE SAME SIZE.
   GAGING: GO .0045 / NO GO .008.

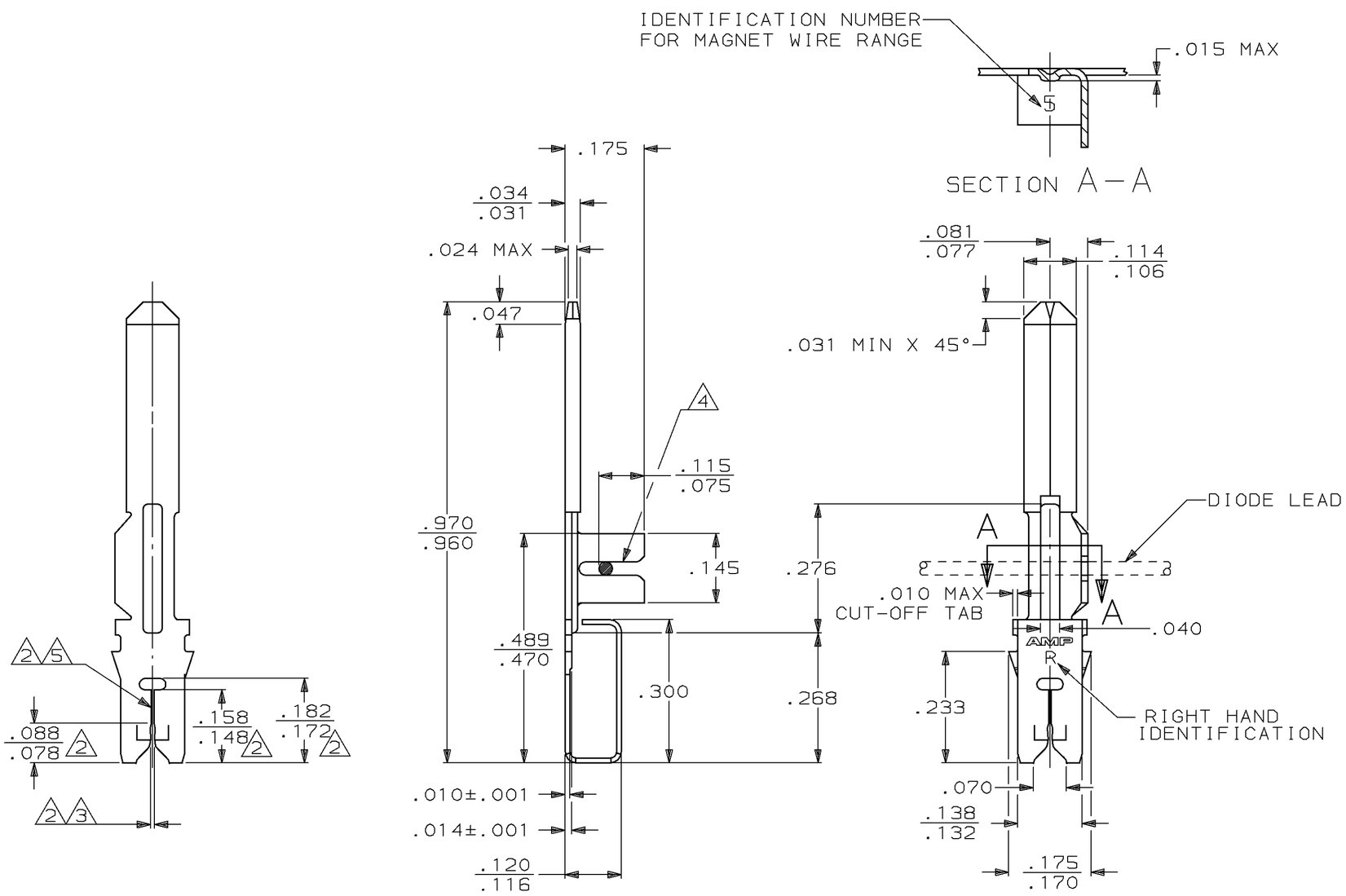

63434

DO NOT SCALE PRINT. UNLESS SPECIFIED DIMENSIONS IN INCHES TOLERANCES ON : 2 PLC DEC ± - 3 PLC DEC ± .010 ANGLES ± -	DR MS FEHER 1/6/88	AMP INCORPORATED Harrisburg, Pa. 17105	63434-1 PART NO
	CHK JR RUTH 2/23/88		
	APPD NE NEFF 2/23/88	NAME TERMINAL, LOOSE PIECE, TAB/DIODE SLOT, RIGHT HAND, "110" FASTON, MAG-MATE ™	
MATERIAL #4 HARD PRE-MILLED BRASS	APPD CG ATHERTON 2/23/88		
	PRODUCT SPEC -		
FINISH TIN	APPLICATION SPEC 114-2046 △1	SIZE C / FSCM NO 00779	DRAWING NO 63434
	WEIGHT -	SCALE 5:1	SHEET 1 OF 1

AMP 1471-6 REV 3-87

09 MAY 1989 08:23:40 S26463 <U5120A>DEPT2127>DWG2127>U.MAG-MATE>U.300

CUSTOMER DRAWING