SPECIFICATIONS		
PARAMETERS	VALUES	UNITS
RATED INPUT POWER	2	W
MAX INPUT POWER	4	W
IMPEDANCE	8 ± 15%	OHM
OUTPUT SPL @ 1W/1M (AT 1.0, 1.2, 1.5, 2.0 kHz)	88 ± 3	dBA
DISTORTION (MAX.)	7%	-
RESONANT FREQUENCY	400 ± 20%	Hz
FREQUENCY RANGE	400 ~ 13,000	Hz
HOUSING MATERIAL	METAL	-
CONE MATERIAL	MYLAR	-
MAGNET MATERIAL	FERRITE	-
OPERATING TEMPERATURE	-25 ~ +55	°C
WEIGHT	182.2	grams

THIS DOCUMENT CONTAINS DATA PROPRIETARY TO PROJECTS UNLIMITED, INC. ANY USE OR REPRODUCTION, IN ANY FORM, WITHOUT PRIOR WRITTEN PERMISSION OF PROJECTS UNLIMITED, INC. IS PROHIBITED.
©2003, Projects Unlimited Inc.

REVISION HISTORY			
LTR	DESCRIPTION	DATE	APPROVED
-	RELEASED FROM ENGINEERING	3/10/2005	
A	REMOVED LEAD FREE ADDED RoHS NOTE	8/10/2005	B.R.
B	REVISED TO INVENTOR 3-D DRAWING TEMPLATE	6/20/2008	B.R.

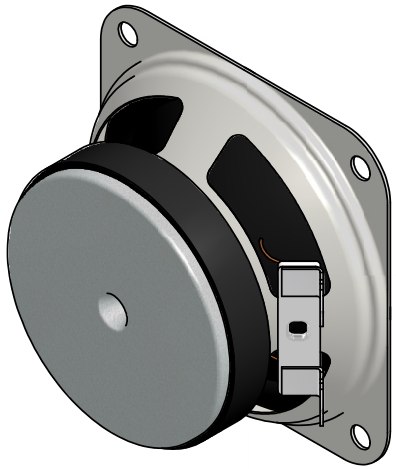

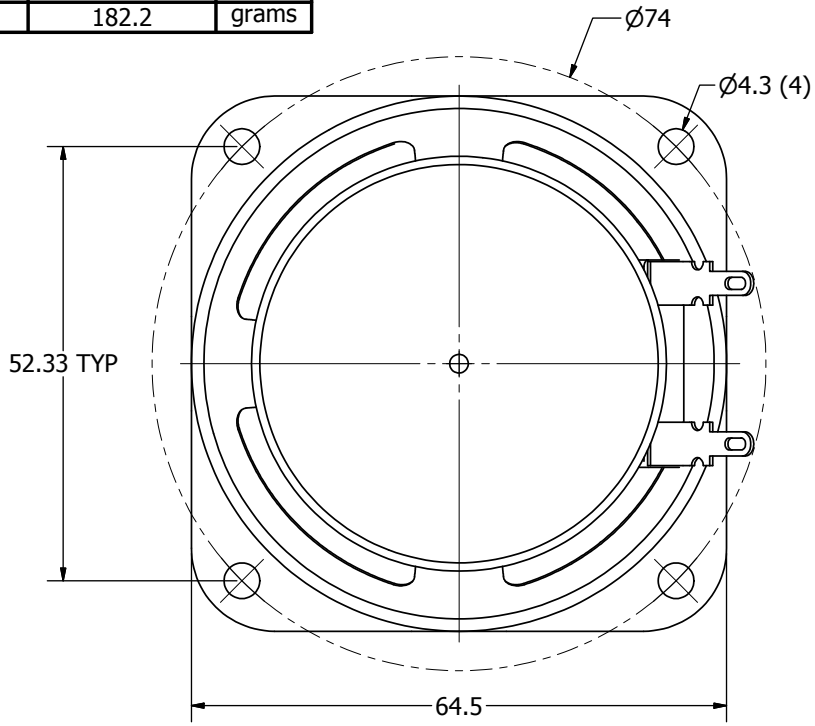

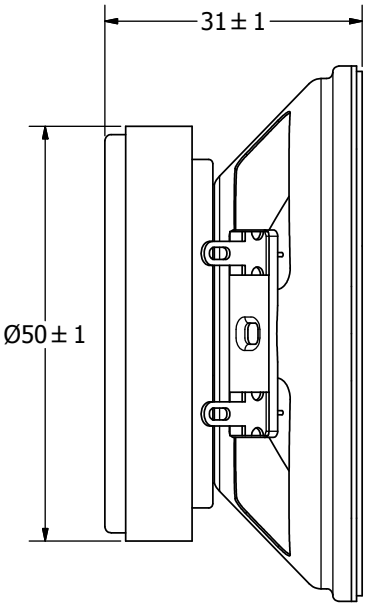

NOTES:

1. ALL DIMENSIONS ARE IN MILLIMETERS.
2. SPECIFICATIONS SUBJECT TO CHANGE OR WITHDRAWL WITHOUT NOTICE.
3. THIS PART IS RoHS 2002/95/EC COMPLIANT.

UNLESS OTHERWISE SPECIFIED: DIMENSIONS ARE IN MILLIMETERS, TOLERANCES ARE ±0.5 AND ANGLES ARE ±3°.	SIZE A3	Designed by	Date	Checked by	Date	Approved by	Date	Drawn Date
		G.V.	3/9/2005	B.R.	3/9/2005	E.P.	3/9/2005	6/20/2008
AS06508MS-R.idw		pui audio A Division of Projects Unlimited		AS06508MS-R				
				Speaker			Edition -	Sheet 1 / 1